## Dimensions: inches (mm)

### Const. Ref. 4

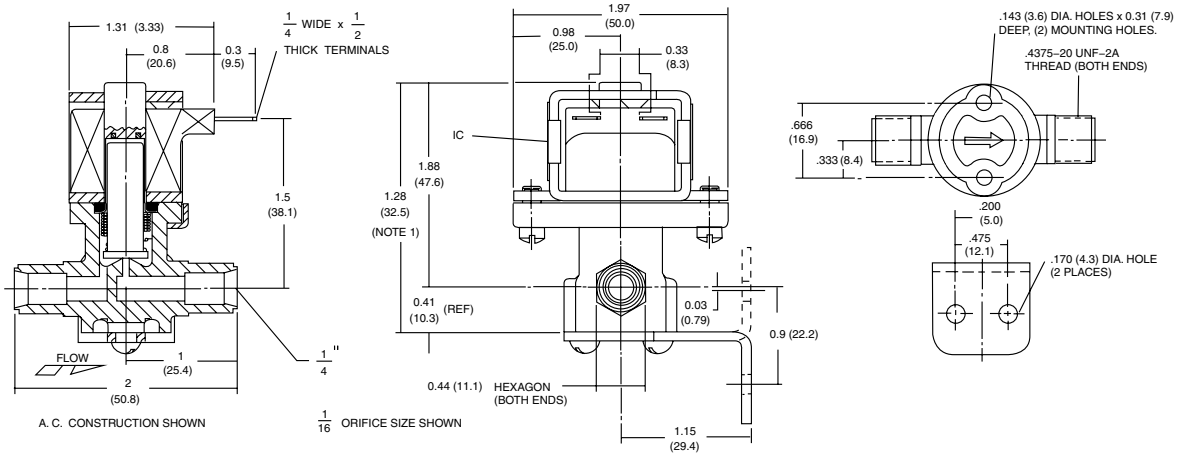


### Const. Ref. 5

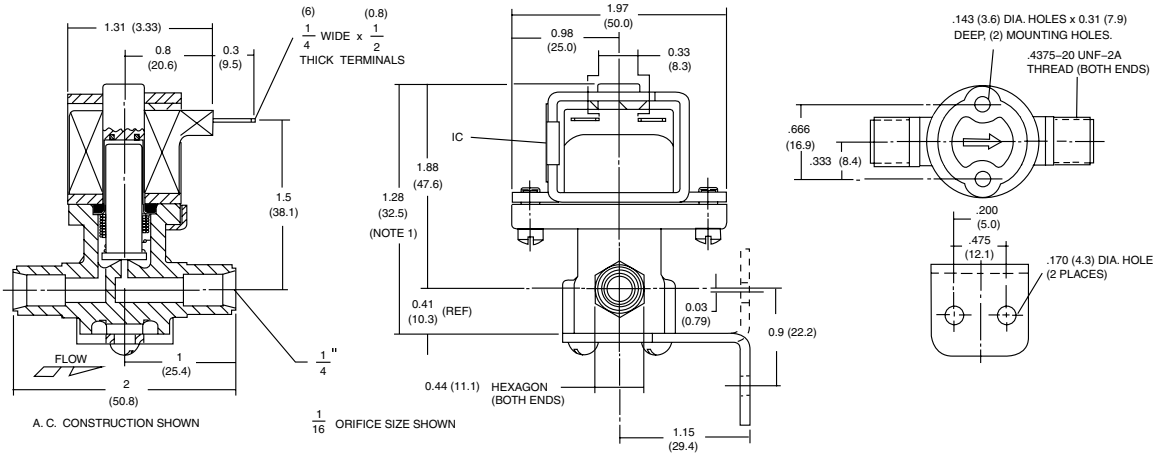

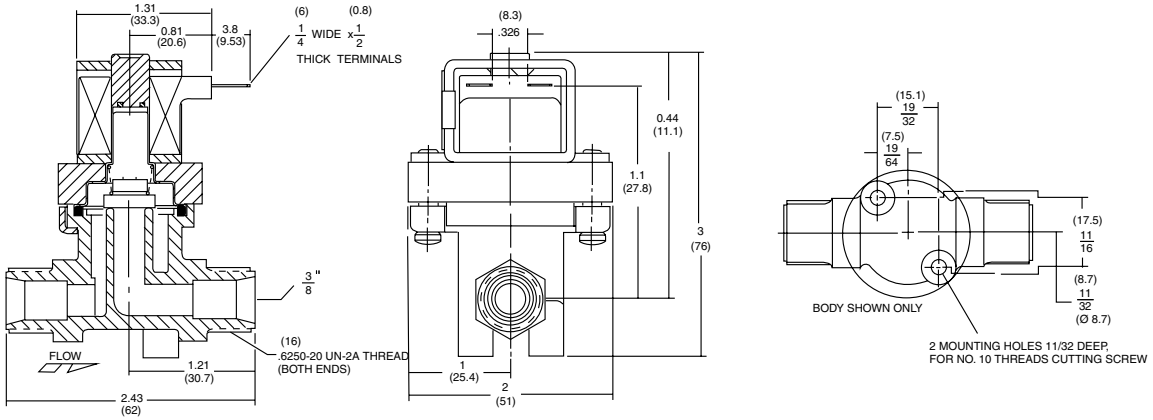
### Const. Ref. 6